VERSION

Quarry version

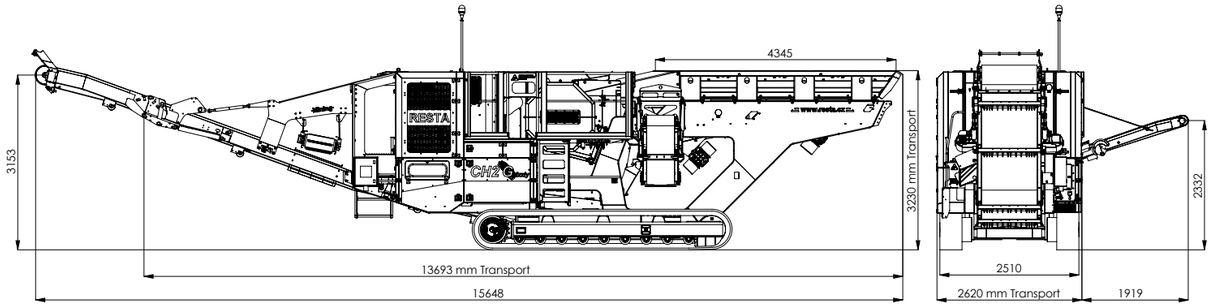

Recycling version

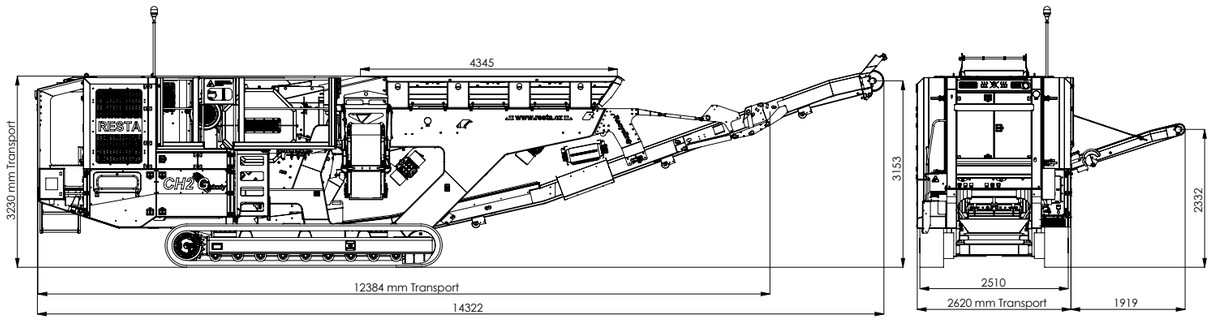

RESTA s.r.o

Contact:

Kojetínská 3120/75
750 02 Přerov
Czech Republic

+420 581 741 811
Fax +420 581 299 958
resta@resta.cz

Company identification:

CRN: 14616807
TIN: CZ14616807

GPS: 49.4435458 N, 17.4361281 E

www.resta.cz

Jaw crusher · Remote control · Remote data · Plug in · Scale · Eco-friendly · Automatic feeding · Active scalping

Lighting · Scalping belt · Hyd. crusher setting · Scalping · Diesel electric · Dust supression · Operator shelter · Magnetic separator

Max. feed size	800x600x500 mm
Final product	0-70 mm, 0-250 mm (according to crusher setting)
Troughtput	70-170 t/h
Hopper	6 m³
Weight	30 t

DESIGNED FOR:

reinforced concrete · concrete · construction waste · natural aggregate up to 250 (300) MPa

RESTA s.r.o.
CRN: 14616807
TIN: CZ 14616807
Kojetínská 3120/75
750 02 Přerov
Czech Republic
resta@resta.cz
+420 581 741 811
www.resta.cz

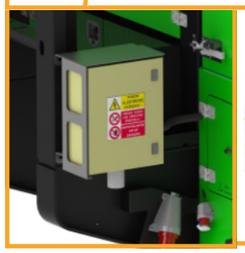

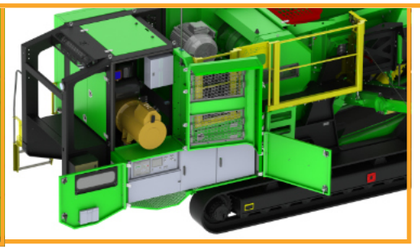

Operation

- ✓ semi-automatic control
- ✓ easy and safe access to all operation and service points
- ✓ operator shelter option
- ✓ fine proportional control of tracked undercarriage
- ✓ double-geared undercarriage

Maintenance and service

- ✓ clean compact design
- ✓ easy access
- ✓ simplicity

Quarry and recycling version

- ✓ optimal efficiency
- ✓ efficient and easy crushing of reinforced concrete – recycling version
- ✓ feeding by an excavator – quarry version
- ✓ jeasy and rapid setup from transport to working position
- ✓ dust suppression for dust reduction

Diesel genset

- ✓ low fuel consumption
- ✓ option to use external power supply
- ✓ double sealing of switchboard
- ✓ user-friendly

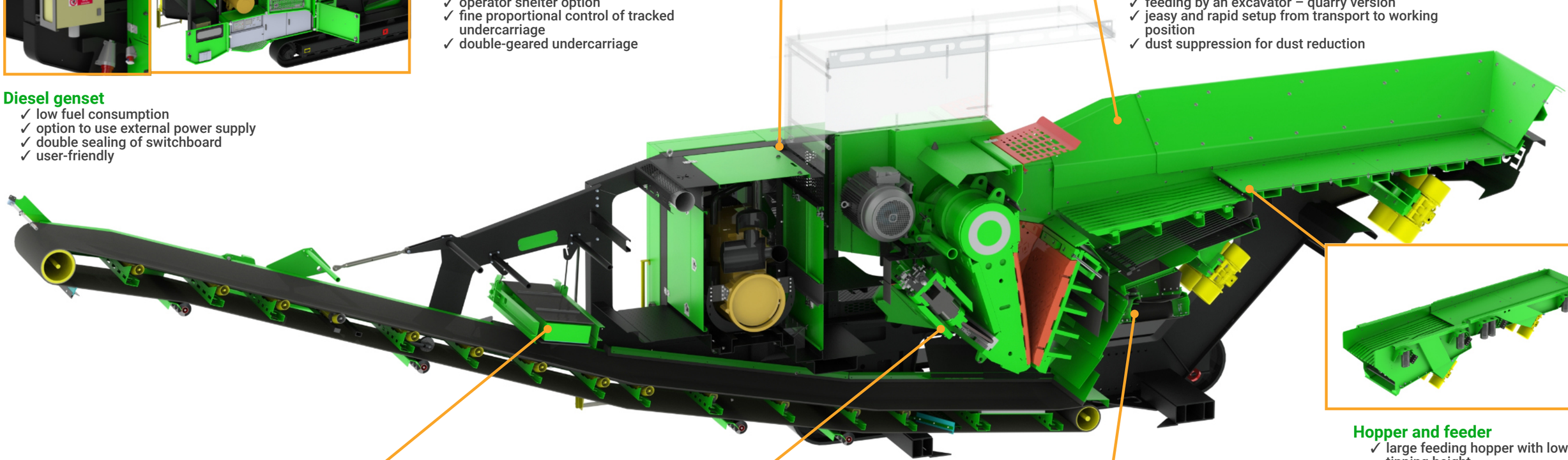

Hopper and feeder

- ✓ large feeding hopper with low tipping height
- ✓ feeder with fluent feeding regulation
- ✓ live scalper with double-deck scalping

Magnetic separator

- ✓ separation of magnetic pieces from the material
- ✓ reversible direction of rotation (discharge to left or right)
- ✓ adjustable overbelt height

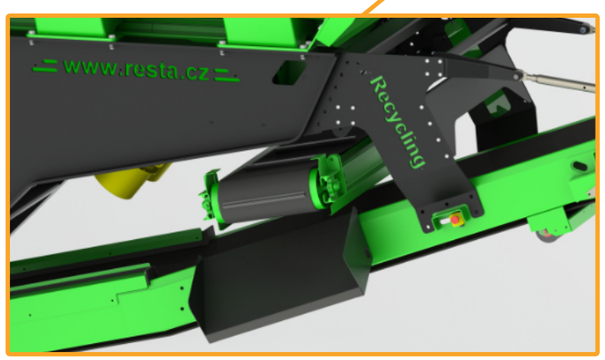

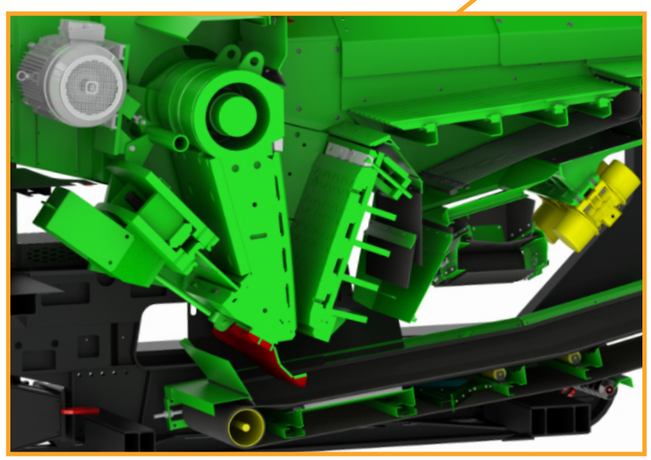

Crusher

- ✓ low operation costs
- ✓ high operation reliability
- ✓ automatic monitoring of the crusher filling
- ✓ automatic material feeding into the crusher
- ✓ high performance and robust structure
- ✓ integrated drive
- ✓ easy replacement of spare parts
- ✓ option to hydraulically set close side
- ✓ hydraulic version – automatic crusher protection when an uncrushable object gets into the crusher
- ✓ recycling version – option to mount an active iron bender for safe and efficient reinforced concrete crushing

Side belt for scalped product
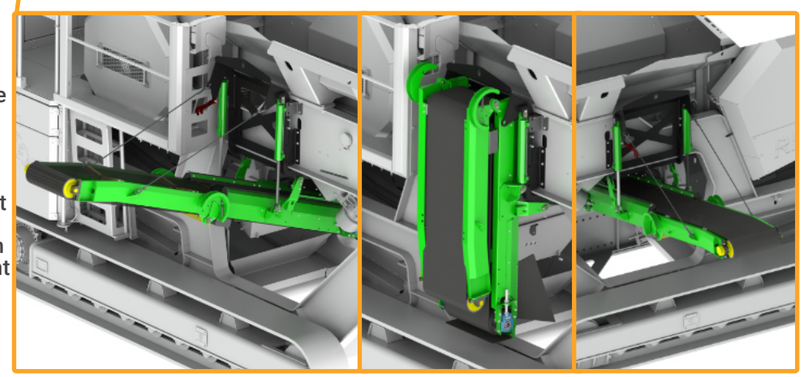
- ✓ side belt can be swapped from side to side
- ✓ user-friendly
- ✓ in transport position, it does not restrict access to the crusher